SPECIFICATION SHEET

COX GOMYL
PART OF ALIMAK GROUP

Monorail Tracks

CG10

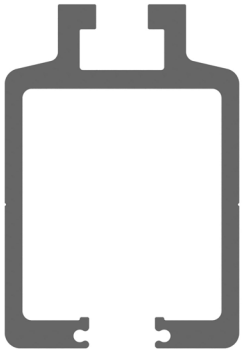

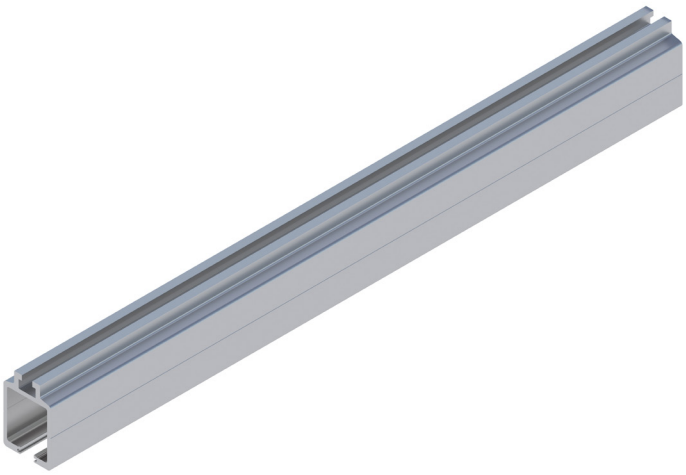

Design Standard	EN 1808
Track Type	CG10
Dimensions	110 mm x 74 mm
Weight	5.89 kg/m
Yield Limit	100 N/mm² 240 N/mm²
Minimum Horizontal Bend Radius	650 mm
Typical Bracket Span	2.0 m – 3.3 m
Bracket Fastening	Top
Fastening Method	2 x M16 bolts for each bracket
Material	Aluminium alloy 6063-T6 Aluminium alloy 6061-T6
Finish	Mill finish
Optional Surface Treatment	Anodized
Optional Colors	RAL 7004 RAL 9001

The CoxGomyl™ monorail is the ideal facade maintenance system for buildings with limited roof space. It can be installed with minimal visual impact respecting the architectural aesthetic. It consists of aluminium tracks in combination with the CoxGomyl trolley range and suspended platforms or as an abseil solution.

CoxGomyl's CG10 monorail tracks is the preferred option when we are looking for a complete integration in the building design. It can be installed hanging or embedded in the roof ceiling. Suitable for indoor and outdoor installations.

CoxGomyl trolleys must be used with the CG10 track.

COXGOMYL and related logos are registered trademarks of Alimak Group AB (publ) and its subsidiaries ("Alimak Group"), in several jurisdictions, including but not limited to the EU and the United States. Alimak Group retains all rights in its name and for above mentioned trademarks, whether registered or not.

Copyright © Alimak Group. All rights reserved.